SHAKTI

PUMPING LIFE

INSTALLATION & OPERATING INSTRUCTIONS

SIMHA 2.0 UNIVERSAL DRIVE



SIMHA + UNIVERSAL DRIVE

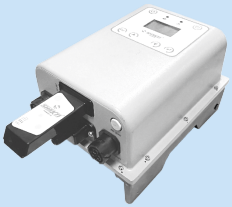

SIMHA 3.0 UNIVERSAL DRIVE





SHAKTI
PUMPING LIFE

Content Page No.

Preface....01
CHAPTER 1: SAFETY INSTRUCTIONS
1.1 Pre-Installation Safety Measures....02
1.2 Installation Safety Measures....02
1.3 Safety during Operation....03
1.4 Safety Symbols....04
CHAPTER 2: INTRODUCTION
2.1 Product Overview....05
2.2 Caution....05
2.3 Receiving & Inspection
2.3.1 Model Explanation....06
2.3.2 Input/Output Connection....06
2.3.3 Items Inside the Drive Box....07
2.3.4 WIFI/GPRS DB9 Connector....08
2.3.5 Shakti RMS/IoTdongle*....09-10
2.3.6 Specification : Simha Plus....11
2.3.7 Drive Frames and Appearances....12-13
2.3.8 Simha with Change Over Switch....14
2.3.9 DC Circuit Breaker and SPD Box....15
Connection Diagram....15
Connection Diagram for unbalanced PV strings....16
CHAPTER 3: INSTALLATION AND WIRING
3.1 Guidelines for installation and wiring....17
CHAPTER 4: BASIC OPERATION
4.1 LCD Module Descriptions....18
4.2 Button Description....18
4.3 LCD Operation....19-27
Chapter 5 : NUMERICAL DISPLAY INFORMATION....28-30
CHAPTER 6 : FAULT DIAGNOSIS AND SOLUTION
6.1 Fault Type....31
6.1.1 Fault information and description in detail....32
CHAPTER 7 : MODBUS COMMUNICATION PROTOCOL
7.1 COM Port Setting....33
7.2 RTU Frame Structure....33
7.2.1 Function Code 0x03....33
7.2.2 Function Code 0x06....33
7.3 MODBUS Address....34-40
CHAPTER 8: RECYCLING AND DISPOSAL....40
Warranty Certificate....41
Warranty Card....42

*Only applicable in which dongle is available

Preface

Thank you for choosing Shakti's Simha Universal Drive. We are pleased to provide you a product that incorporates the latest technology and exceptional services to the customers.

This manual includes information for installation, maintenance, and safety of the drive. Please read the instructions of this manual carefully to ensure equipment's proper functioning and personal safety.

The images of the product shown are only for illustration the original product may vary.

In this manual company refers to Shakti Pumps (India) Ltd. Our contact details are given on the last page.

Please check the latest version at www.shaktipumps.com



Fig.1 Simha Universal Drive

CHAPTER 1 : SAFETY INSTRUCTIONS

⚠ WARNING! Ignoring the following instructions can cause damage to the equipment or physical injury or in some cases death.

1.1 Pre-Installation Safety Measures

1. Before using the unit, read all the instructions and cautionary markings, on the unit and all its appropriate sections.
2. The gross weight of the equipment is close to 6 Kg. Kindly lift the drive carefully.
3. Please check the condition of the package and look for any sign of damage. Don't use the damaged or incomplete drive.
4. Customers are NOT authorized to open the drive or to do any kind of modification, or repair, otherwise, there is a danger of shock and loss of warranty.
5. To store the drive, kindly follow instructions given in chapter 2.

1.2 Installation Safety Measures

1. Installation should be done in the presence of a professional technician. Safety equipments such as shoes, helmets, and gloves should be used by the technician.
2. Installation of the drive should be carried out on a solar structure with proper ground clearance and specified nuts and bolts.
3. Install the drive on metal or other non-flammable material, and keep it away from any combustible material.
4. The drive should not be installed inside a closed chamber, to ensure proper heat dissipation. Ignoring this will result in malfunctioning of drive and loss of warranty.
5. Before starting wiring and connections make sure that PV panels, drive, motor, and all other accessories are properly fitted on their designated place.
6. Ensure that the drive, motor, and adjoining equipment are properly earthed to reduce electromagnetic emission and interference.
7. Make sure that earth conductors are adequately sized as required by safety regulations.
8. Make sure that the voltage grade of the power supply is consistent with the drive's voltage. Also, note that all PV panels are connected in series or parallel as per system's requirement in order to have required voltage fed to the drive.
9. There must not be any loose connection. Make sure that all insulations are proper in order to prevent any damage/injury. Also periodically inspect insulation in case of a bad weather.
10. Make sure that earthing wire is connected with drive. The wire diameter should be 4sq. mm and color coded is yellow-green or green.
11. Check whether the wiring is correct and firm, there should not be any short circuit in the peripheral equipment's circuit.

12. Ensure that the output of the drive is turned off while setting all the required parameters.
13. For the drives whose storage time is over 1 year, when electrification, the voltage should be raised by booster from low to high. Otherwise it may damage the drive.
14. Ensure that no unauthorised filter is connected to the output of the drive. It may cause loss of warranty.
15. No magnetic switch or magnetic contactor should be connected to the output circuit of the drive, when drive is in the operation with load, magnetic switch or magnetic contactor can falsely trigger the over-current protection function leading to mal-operation of the system.

16 Install DU/DT filter if the cable length between Motor & Drive is above 70m.
17 Ensure that the cable length between controller to solar panel should be 5 to 10 m.
18 Install suitable Lightning Arrestor (LA) and earth it seperately.

1.3 Safety during Operation

1. Make sure that the ratings of the pump, motor, and drive comply with each other.
2. The cooling fan or the heatsink should not be touched otherwise there is a danger of getting burnt.
3. Do not operate or touch the drive with the wet hand.
4. Do not put any of your belongings like mobile etc. on the drive.
5. Disconnect PV power from the drive under the supervision or presence of a trained electrician.
6. It is mandatory to disconnect input power before starting any maintenance work.
7. After the input is disconnected from the drive, wait for at least five minutes so as to allow the internal capacitors to get discharged for the safety of operation.
8. Do not conduct any insulation or voltage withstands tests on the drive.
9. At over 1,000 metres altitude, the drive's heat dissipation function deteriorates, therefore, use proper derating.
10. Untrained workers are banned to check the signals in the running stage.
11. Remove the PV power supply only after the electric machine stops running.
12. The load should be motor or pump. Any other load may cause heating or burn the device
13. The solar panel and drive should be clean once in a three months for proper operation of the drive.

Attention

1. The DC connection terminals PV+ and PV- carry a dangerous DC voltage of up to 800V.

2. At the drive input, the photovoltaic cells generate DC voltage even at low intensity of sunlight.
3. While cabling, make sure that it does not come in the path of any other work e.g. harvesting or digging.
4. If there is any abnormality kindly contact our customer care.
5. The drive and its heat sink may be at a relatively higher temperature than the ambient.
6. The drive output is pulse wave type. If a digital multimeter is used for measurement then there could be a large deviation in the measurement, and these deviations would be different for different kinds of digital multimeters.
7. Improper wiring and utilization or unauthorized alteration may result in damage to drive or other equipment, users will be responsible for the cause and there will be a loss of warranty.

1.4 Safety Symbols

The safety symbols used in this manual highlight potential risks and provide important safety information, as listed below:



SHOCK HAZARD -
Caution, Risk of Electric Shock symbol indicates important safety instructions, which if not correctly followed, could result in serious injury or death.



WARNING-
Warning symbol indicates important safety instructions, which if not correctly followed, could result in electric shock, minor injury or damage to the equipment.



HIGH TEMPERATURE HAZARD -
Caution, Hot Surface symbol indicates important safety instructions, which if not correctly followed, could result in burns. (device body temperature may exceed 80° C during operation). Please do not touch inverter surface.



EARTHING -
It Indicates location of grounding, if inverter is not grounded properly, could result in electric shock, minor injury or damage to the equipment.



ENERGY STORAGE TIMED DISCHARGE -
Caution, Risk of electric shock, energy storage discharge time symbol indicates important safety instructions, which if not correctly followed, could result in electric shock. (Discharge time is 5 minutes from de-energization. Please do not touch device until it discharges energy).



REFER TO OPERATING INSTRUCTIONS -
It indicates that user should refer to operating or installation instructions before proceeding.



WEEE DIRECTIVE : PROPER PRODUCT DISPOSAL -
This product must not be disposed of with household waste. Instead, it should be handled in accordance with applicable electronic waste disposal regulations at the installation site. Proper disposal supports environmental protection and complies with local legal requirements.

CHAPTER 2 : INTRODUCTION

2.1 Product Overview

Shakti's Simha Universal Drive is a unique product designed, developed and manufactured in India. SIMHA series are three phase variable frequency drive compatible with solar power system.
SIMHA Drive can convert the DC generated by solar panels into AC, which is in accordance with current required to drive motor.

Note : No internal or external isolation transformer is required.

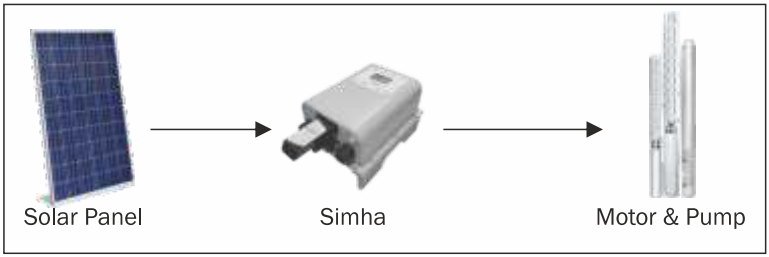

Name	Description	Remarks
A	Solar panels	Monocrystalline or polycrystalline silicon, and thin-film PV modules
B	VFD	SIMHA 0.75HP, 1HP, 2HP, 3HP, 5HP, 7.5HP, 10HP, 15HP
C	Motor	AC-IM, PMSM, IPMSM & S4RM

2.2 Caution

Measures to be taken for drive storage

- The solar variable frequency drive should be kept in the shipping carton or crate before installation.
- Storage area should be clean, dry, and free from direct sunlight or corrosive fumes.
- Storage area has an ambient temperature range of -20 °C to 60 °C.
- Storage area has a relative humidity range of 0% to 90% and non-condensing environment.
- Storage area has an air pressure range of 85kPA to 107kPA.

DO NOT store

- In an area with the rapid change in temperature (condensation and frost may be caused).
- In a place with lots of water leakage.
- In a place which has a high risk of fire ignition.
- Do not dispose of batteries in a fire. The batteries may explode.
- Do not open or damage batteries. Released electrolyte is harmful to the skin and eyes. It may be toxic.

NOTE: If storage of drive is for more than 3 months then ensure that temperature should not be more than 30° C. Storage more than a year may reduce the lifespan of drive.

2.3 Receiving and Inspection

2.3.1 Model Explanation

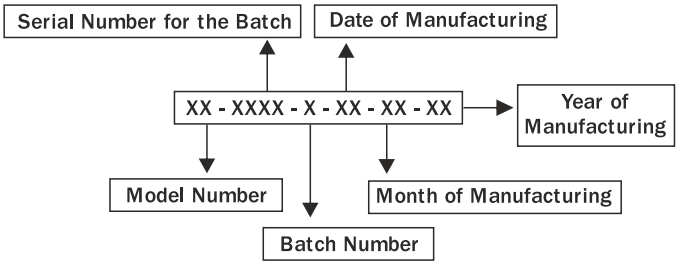

2.3.2 Input/Output Connection

Connector Terminal Marking	Connection Sequence for Model with connector			For GPD model with mono panel
	Input		Output (Motor conection)	
	1Ø	3Ø	3Ø	Input
L/R	Phase/Live/PV+	L1/PV+	Red	-
N/Y	Neutral/PV-	L2/PV-	Yellow/Yellow Green	
PE/B	-	L3/PV-	Blue/Black	
Cable Colour Code	**Connection Sequence for Model with cable**			
	1Ø	3Ø	3Ø	For 3Ø GPD model
Red	Phase/Live	L1/PV+	Red	R/PV+
Yellow/Yellow Green	-	L2/PV-	Yellow/Yellow Green	Y/PV-
Blue/Black	Neutral	L3/PV-	Blue/Black	B/-

Here L1,L2,L3 are 3Ø inputs

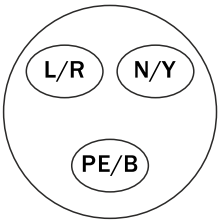

Figure 2.1

- **Wire Colour Coding for Input and Output Connections**

INPUT/OUTPUT TERMINAL	INDIA	EUROPE	USA
R	RED	GREY	RED
Y	YELLOW	BROWN	YELLOW
B	BLUE/BLACK	BLACK	BLACK

*only for GPD models.

2.3.3 # Items Inside the Drive Box

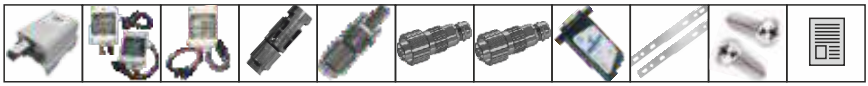

S.No.	Item Name	Qty.
1	Simha Universal Drive	1
2	Changeover Switch (1Phase / 3Phase) *	1
3	DC Circuit Breaker & SPD Box *	1
4	Input PV Connector (F)	1
5	Input PV Connector (M)	1
6	3 Phase Input Connector *	1
7	Output Connector*	1
8	Shakti RMS Dongle without WiFi	1
9	Mounting Plate	2
10	M4 Screw	2
11	M6 Screw	4
12	User Manual	1

***** only with certain models

The Accessories varies based on the various models & configuration.

Note : The internal battery is Coin cell, 20.0mm Lithium 3V Non-Rechargeable (Primary).

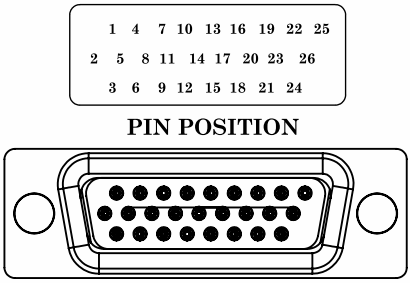

Figure 2.2 - COM Port *

PIN	NAME	PIN	NAME
1	PLC_COM	14	PLC_IN3
2	CGND	15	PLC_IN2
3	DRY1_COM	16	PLC_IN1
4	DRY 2 _COM	17	PLC_Vin_SNS
5	DRY 1_NC	18	PLC_Iin_SNS
6	DRY 2_NC	19	V2 Vout_PLC
7	DRY 1_NO	20	V2 Iout_PLC
8	DRY 2_NO	21	RS485_B
9	PLC_IN8	22	RS485_A
10	PLC_IN7	23	CGND
11	PLC_IN6	24	TOG_SW1
12	PLC_IN5	25	+24V_ISO
13	PLC_IN4	26	CGND

26 Pin connector is optional. In case of solar drive one digital and one analog sensor is available in the same place.

2.3.4 WIFI/GPRS DB9 Connector

Connect IoT dongle or RS 232 to USB cable to this port for recording and observing data from the Simha 2.0 on online portal. When the dongle is connected, it sends recorded data of all the parameters used in operation of the unit, But if some specific parameter is required to be observed, RS 232 to USB converter cable can be connected and data corresponding to a particular address according to the table 7.3 can be accessed.

NOTE: The Pins 1 & 5 of the DB9 Connector are the source pins of 5 V at few milliamperes, current, These pins cannot be used as sink, even for a single milliampere current.

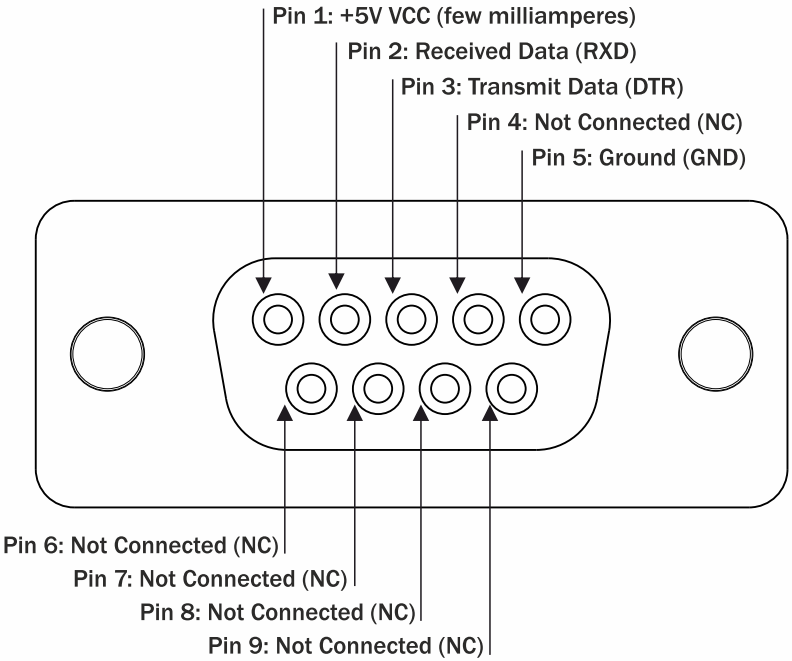

Figure 2.3 RS232 Connector

2.3.5 SHAKTI RMS/IoT DONGLE

- Remote Monitoring and Control.
- In-built Data Logger & RTC.
- Compatible with GSM, WiFi & Bluetooth.

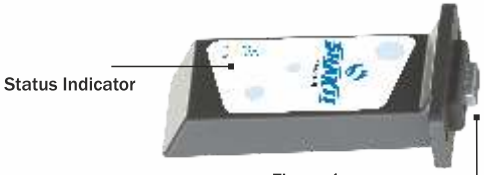

Figure 1

1. Product Appearance

Status Indicator:*

Pulse LED (GREEN)	Constant ON/OFF Blink 1time in 2sec Blink in every second Blink 2 times in 1sec Blink 4 times in 1 sec	Abnormal[1] No Sim detected [2] Normal[1] /No Internet [2] Internet connected [2] Data transfer in process[2]
Signal LED (RED)[1] GPS (RED)[2]	ON Blink in every second OFF	Normal[1]/ GPS location fixed [2] Getting GPS location[2] Abnormal(Signal low)[1]/ GPS off [2]
NETWORK LED (GREEN)[2]	Constant ON Constant OFF	4G Connectivity[2] 2G Connectivity[2]
Wi-Fi LED (YELLOW)[1]	ON/Blink OFF	Normal[1] No WiFi Network[1]

here 1 and 2 indicates 2G and 4G dongle respectively.

*Valid for dongles with in-built LED indication



Figure 2

2. Installation and Connection

For installing the SHAKTI IoT dongle.
Follow these steps :

Step1: Remove the cover and take out the motherboard.

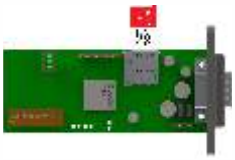

Figure 3

Step2:
Insert SIM card as per the correct direction marked.

Step3:
Put the motherboard back into the enclosure.



Figure 4

Step 4:
Insert the dongle into DB9 port and use two M3x10 screws to fix the dongle along with gasket.

3. Configuration

Step1: Connect the "Shakti IoT dongle" to the main device and check the "pulse LED" (green) blinking in every second.

Step2:
If the sim card is present in the "Shakti Iot dongle" and 2G or 4G network is available in that area, the Signal LED (RED)[1] will be ON for 2G dongle and Pulse LED (GREEN)[2] will blink in every second for 4G dongle.

Step3:
To configure the Wi-Fi in 2G dongle follow these steps:

3.1) Turn ON Wi-Fi on your Mobile and select "SHAKTI_DONGLE and connect it with the password "shakti123".

An HTML page will open in your browser otherwise browse http://192.168.4.1. You will get the HTML page like this:



Figure 5

3.2) Now "Configure Wi-Fi" now new page will open like this:



Figure 6

3.3) Select your preferred WiFi with proper password and then save. In case your WiFi network is not visible in the list scan again.



Figure 7

On successful configuration, WiFi LED (yellow) will be ON.

NOTE
a) Shakti IoT Dongle is designed to work with GSM on priority, WiFi is always secondary.
b) For using Wi-Fi remove SIM card then connect shakti dongle.
c) On successful TCP connection WI-FI yellow LED will blink in every second.

4. Troubleshooting
1) If Pulse LED is constantly ON/OFF, check main device power supply or restart the device.
2) If signal LED not glowing, check sim card / signal strength.
3) If Wi-Fi LED not glowing, check Wi-Fi network / reconfigure Wi-Fi settings.

5. Contact Shakti to integrate IoT Dongle to other products & solutions.

2.3.6 Specification : Simha Plus

Power	Solar 1-3 HP	Solar 1-3 HP	Solar 1-5 HP	Solar 5-7.5 HP	Solar 10 HP	GPD 1-3 HP		GPD 5-10 HP	Solar 15 HP	Solar 10 HP
AC Voltage range(If applicable)#	NA					90-270 VAC (1PH)	200-460 VAC (3PH)		200-480 VAC (3PH)	NA
Min. DC Voltage	30 V			200 V		30 V	200 V			
Max. DC Voltage **	450 V	315 V	470 V	850 V		450 V	720 V	850V		
Nominal DC voltage	250 V	250 V	370 V	705 V		250 V	550 V	705 V	600 V	705 V
Start Voltage	30 V			200 V		30 V	200 V	200 V	200 V	200 V
MPPT Voltage range	50-400 V			250-720 V		50-400 V	250–720 V	250-720 V	200-850 V	250-720 V
Max. DC Input Current	15 A	18 A	18 A	15 A		15 A	15 A	20 A	26 A	18 A
Max. Power at DC Side	3000 W	3300 W	5200 W	10000 W		3000 W	5000 W	10000 W	14000 W	10000 W
No. of MPPT	1									
No. of Strings	1									
Nominal AC voltage range	0-300 VAC	0-230 VAC	0-300 VAC	0-560 VAC	0-560 VAC	0-300 VAC	0-400 VAC	0-560 VAC	0-480 VAC	0-415 VAC
Frequency	0-400Hz									
Max AC current	15 A	15 A	15 A	15 A	15 A	15 A	15 A	20 A	25 A	15 A
Max Power at AC side	3000 W		5000 W	9600 W		3000 W	4700 W	9600 W	14000 W	9600 W
THD***	70-150%									
Slope	4400 V/us			8300 V/us		4400 V/us	7200 V/us	8300 V/us		
Peak	450	315	470	850		450	720	850		
Connection Phases	3 phase only									
Max Efficiency	>93%			>96%						
Peak MPPT Efficiency	>99%									
Short Circuit Protection	60 A			90 A		60 A	60 A	90 A	110 A	60 A
Lightning/Surge Protection	4KV									
Over Temperature	80° C									
Over Current	15 A / User defined									
Over Voltage	450 V	315 V	470 V	850 V		450 V	720 V	850 V		
Dry Run	YES									
Ingress Protection	IP65									
Pressure Vent	70mBar for 4000 ml/min									
Input Connection(DC)	MC4/2C Cable					Plug in connector/3C Cable				2C Cable
Output Connection(AC)	Plug in connector/3C Cable									
LCD display	Graphical LCD(128x64 pixels)									
Display Language	English									
Communication Protocol	RS232 / Modbus / (RS485/UART)*									
Features with dongle	GSM / GPRS / Bluetooth / WI-FI*									
Topology	Three phase two level VSI									
Cooling Method	Forced Air cooling									
Ambient Humidity	0-90%									
Altitude	<1000 m									
Mounting	Vertical (tentative)									
Noise (dbA)	<20 dBA(TBD)									
Operating Temperature Range	-20°C to 70°C (45 to 70 with derating)									
Dimensions(L*W*H)*	(377 x 219 x 170 mm^3/ 367 x 180 x 163 mm^3)±5									
Gross weight	Approx 7.5Kg									Approx 6Kg
Standard Warranty	5 Year									
Certificates	IS16221-2 (IEC62109-2), IEC60529, EN50530									

Note:

1. Off-white top cover refers to SIMHA PLUS UNIVERSAL DRIVE.
2. Values are subject to change as per model no. , please refer sticker parameters for final value.

#The AC input voltage is applicable for General Purpose Drives (GPD) only.

**Max. DC Voltage may change please refer sticker parameter for final value.

***Including near switching frequency harmonics.

• Product dimensions may differ as per the respective model number.

2.3.7 Drive Frames and Appearances

- Simha Plus

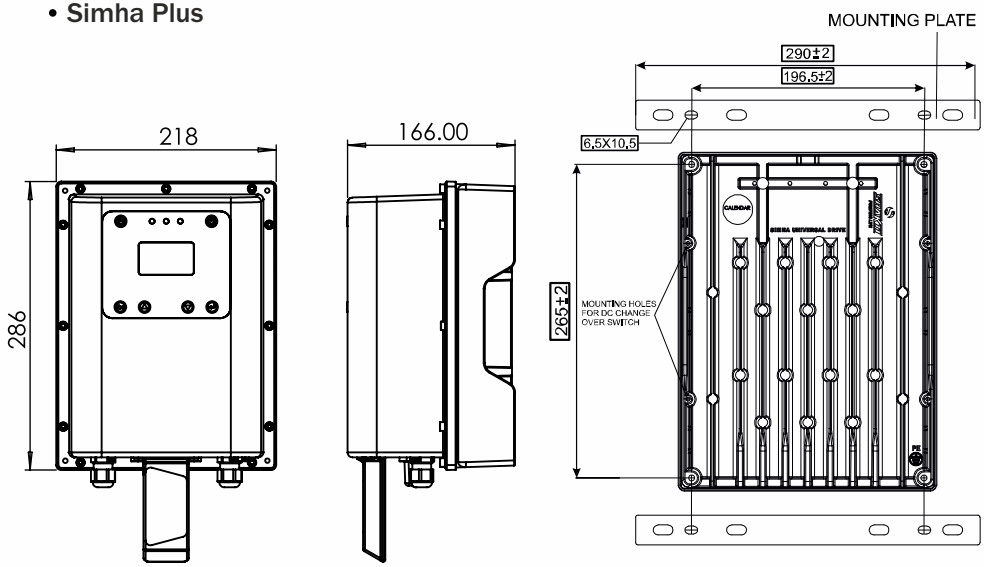

Figure 2.4 Drive top, side view & back view

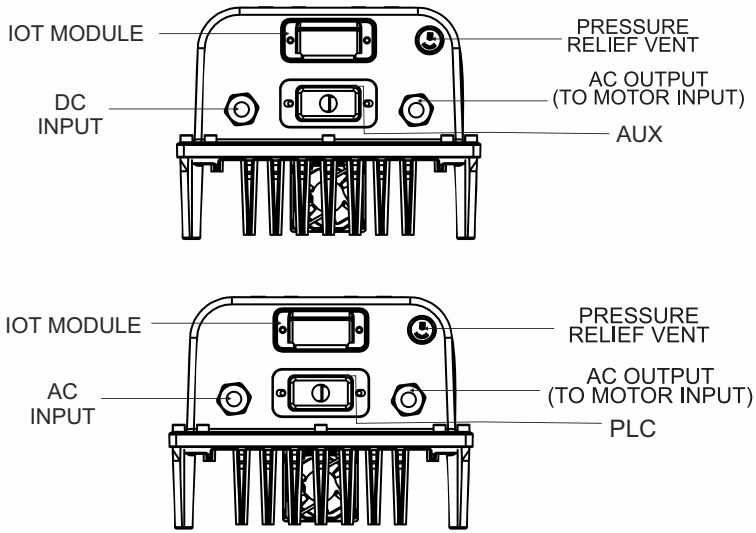

Figure 2.5 Drive front view

- **Simha 3.0**

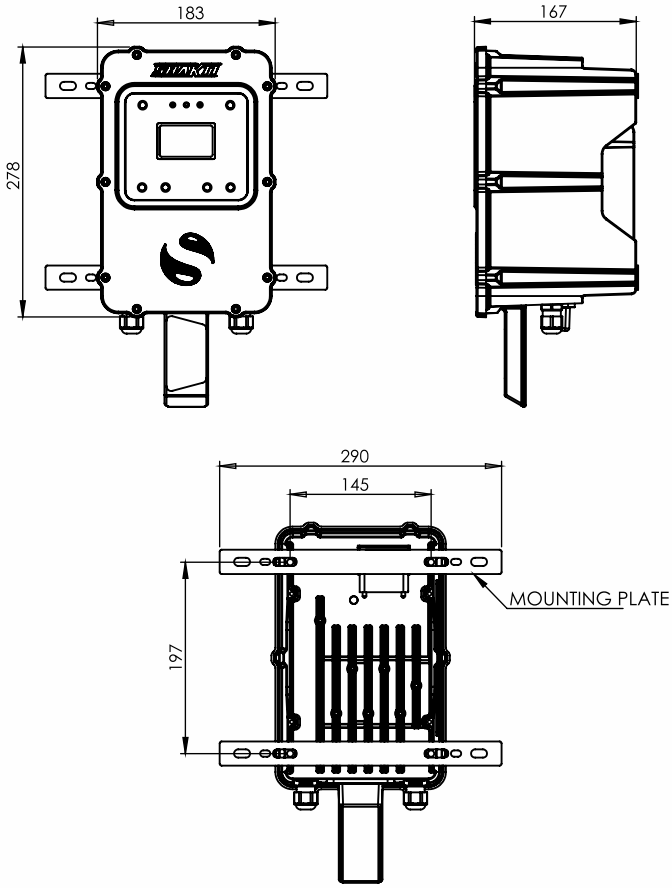

Figure 2.6 Drive top, side view & back view

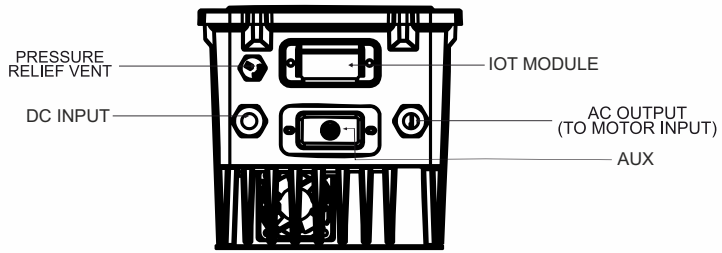

Figure 2.7 Drive front view

2.3.8 Simha with Change Over Switch

The change-over switch provided with this model of SIMHA Universal Drive 2.0 is a dual input single output device, which is used to change the input power source to the controller. It is generally used with controllers/drives which have options to run from solar as well as from grid. There are three operative positions in change-over switch corresponding to S1, S2, (Up and Down) & M (Middle). In the case of S1 and S2 positions, the corresponding sources are connected to output whereas and in M position none of the sources are connected to output. Conventionally, the name of the sources is marked as S1 and S2 position for the convenience of the user. The change-over switch is provided in a dust and rainproof IP 65 rated box.
Note: It should be noted that while changing the power source through change-over, the M position should be used until the display of the controller turns off. This intermediate use of the M position avoids inrush currents through the changeover switch and improves its life.

Below 2 HP: Single Phase Grid Input
Above 2 HP: Three Phase Grid Input

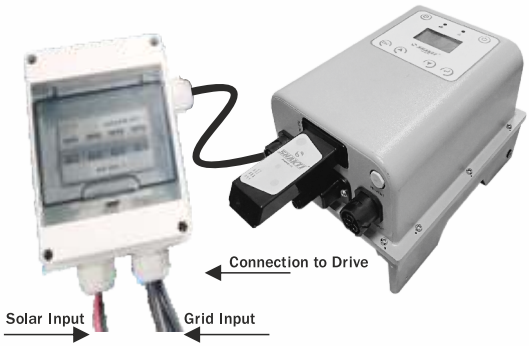

CONNECTION DIAGRAM FOR 3-PHASE DRIVE

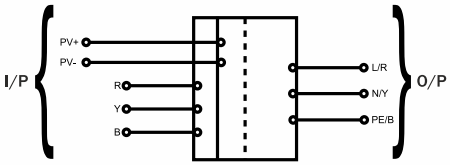

CONNECTION DIAGRAM FOR 1-PHASE DRIVE

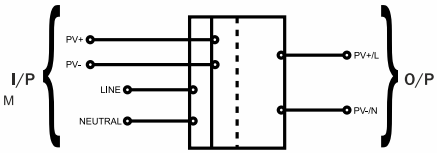

*Product Image shown for reference only.

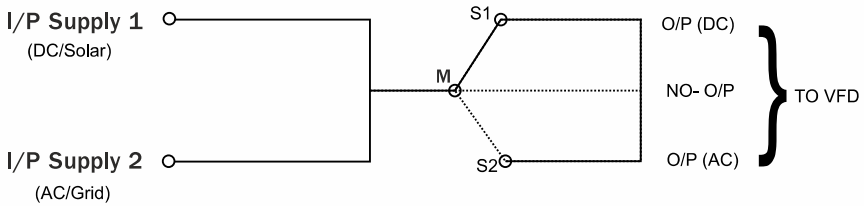

2.3.9 DC Circuit Breaker and SPD Box

SPDs (Surge Protection Device) are designed to limit transient over voltages due to lightning or switching and divert the associated surge currents to earth, so as to limit these over voltages to levels that are unlikely to damage the electrical installation or equipment. This device is connected to the power supply in parallel with the loads (circuits) that it is intended to protect. In addition to safety, the surge protectors dedicated breaker performs the following functions:

- Allows power to the protector to be removed without interrupting power to other loads.
- Should a component fail inside the protector, only the protector's breaker will trip, and power to other loads is not disturbed.

MODELS:

1. For VFD (1HP- 5HP) - DC Circuit Breaker & SPD Box_ 16 Amp
2. For VFD (7.5HP & 10HP) - DC Circuit Breaker & SPD Box_ 32 Amp

CONNECTION DIAGRAM

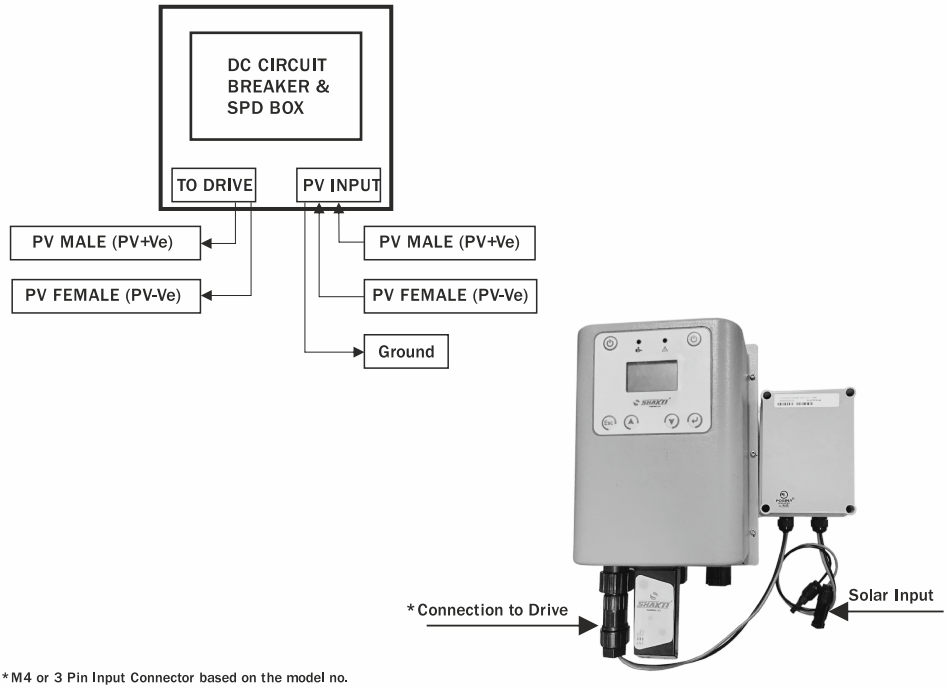

*M4 or 3 Pin Input Connector based on the model no.

Connection Procedure for Unbalanced PV Strings

The new simha drive provides a feature to connect unbalanced strings without circulating currents between the strings. In order to achieve this without a DC disconnect switch (MCB), one needs to short the negative of both the strings and connect it to the "L" terminal of the input connector. The two positives can be connected to the "N" and "PE" terminals of the input connector as shown in Fig. 1.
If an input DC disconnect switch is used then the negative of both the PV strings should be shorted and given to the first terminal of three poles MCB (named PV-). The positive of both the strings should be given to the other two terminals. The output connection from the MCB should ensure that the negative of the PV strings get connected to the "L" terminal or black wire of the three pin input connection of the drive as shown in Fig. 2.

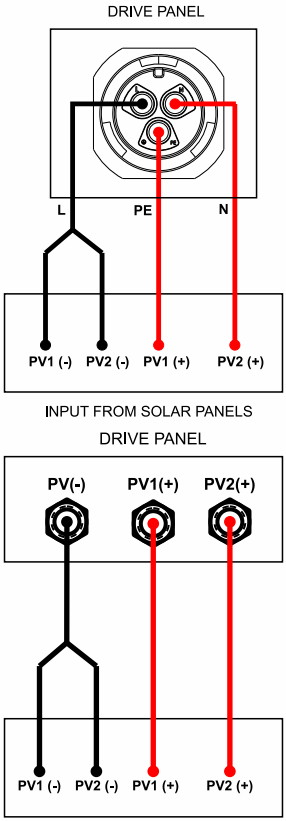

Fig. 1 - Connection configuration to drive

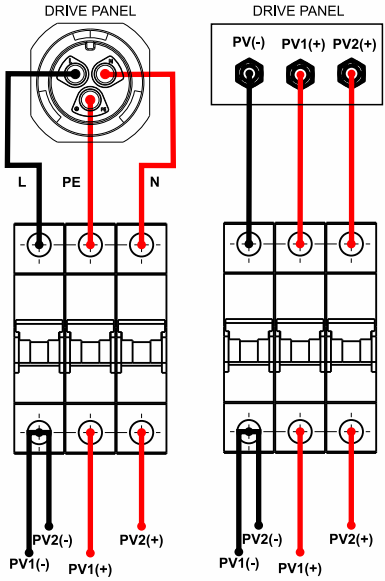

Fig. 2 - Connection configuration to drive via input MCB

CHAPTER 3: INSTALLATION AND WIRING

Installation of the drive is simple with effortless wiring connections for Simha Universal Drive. Its DC input has poka-yoke connectors i.e. wrong connection is not possible by virtue of its construction. The drive works properly even in case of reverse polarity connection.

3.1 Guidelines for installation and wiring

1. The drive should be taken out of the packing box properly keeping in mind its weight.
2. Installation of drive should be carried out on solar structure with proper ground clearance and specified nuts and bolts.
3. Install it vertically on the pole (maximum inclination allowed is 15 degrees only).
4. Pay attention to the installing place to guarantee the effective heat dissipation.
5. Screw the nuts and bolts and make sure they tightened nut and bolt properly. Connect the earthing wire at the bolting place.
6. Connect the plug in PV inputs to the drive. Please refer labeled diagram of drive.
7. After that follow instructions given in chapter 4 of this manual.
8. Connect the output plug in connector to the load.

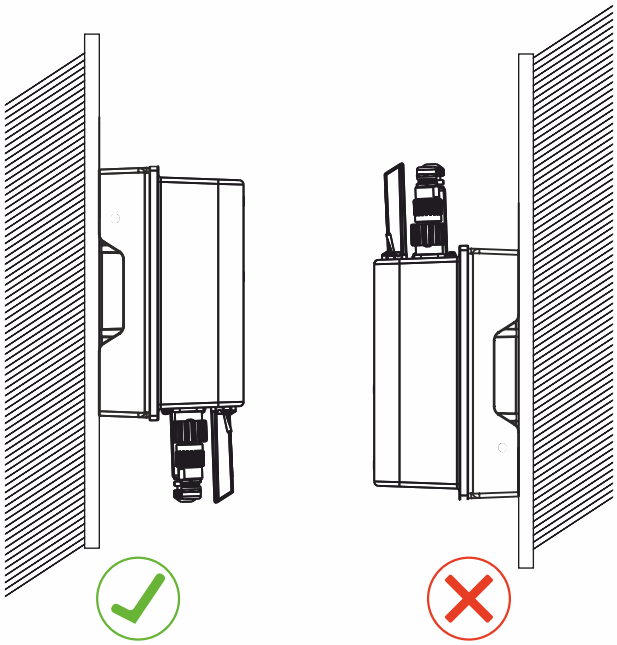

Figure 3.1 Correct and Incorrect installation of drive

CHAPTER 4: BASIC OPERATION

4.1 Display Module Description

Following figure 4.1 is indicates the outer look of Display. It has six buttons, three LED indicators, one 126.5X105.5 mm LCD Display.

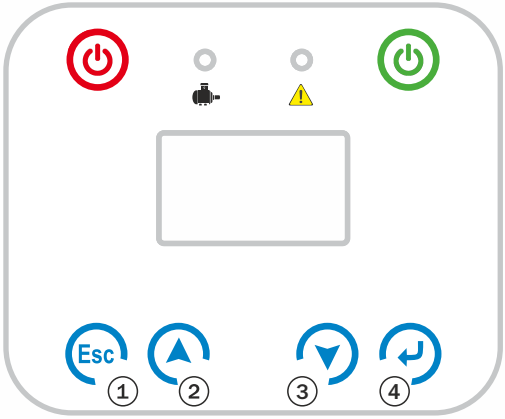

Figure 4.1 LCD Module

4.2.Button Description and Operation

Button	Functionality
Power	• To Turn ON the Motor
Power	• To Turn OFF the Motor
ESC (1)	• Previous Screen
UP Arrow (2)	• Used for Scrolling up • For increasing the parameter values in Configuration menu
Down Arrow (3)	• Used for Scrolling down • For decreasing the parameter values in Configuration menu
ENTER (4)	• Selection

4.3 LCD Operation

- Startup

Upon starting the unit for the first time, the LCD Display enters into Factory Setup interface. In factory setup, the user gets an option to set various parameter required for the proper functioning of the product which are illustrated in the figure 4.2.

Scroll through various options displayed on the screen with the Up & Down buttons and press Enter to set the parameter and Esc to exit the particular option. The RTC Date & Install Date are set in the format DD/MM/YY and the RTC Time in HH:MM:SS. Other options are common to factory setup option in main menu therefore, are discussed in section"f" of CONFIGURE (refer Page - 24).

After the successful starting of the product or whenever the LCD is not operated for a period of time, 6 status screens appears in rolling until menu button is pressed.

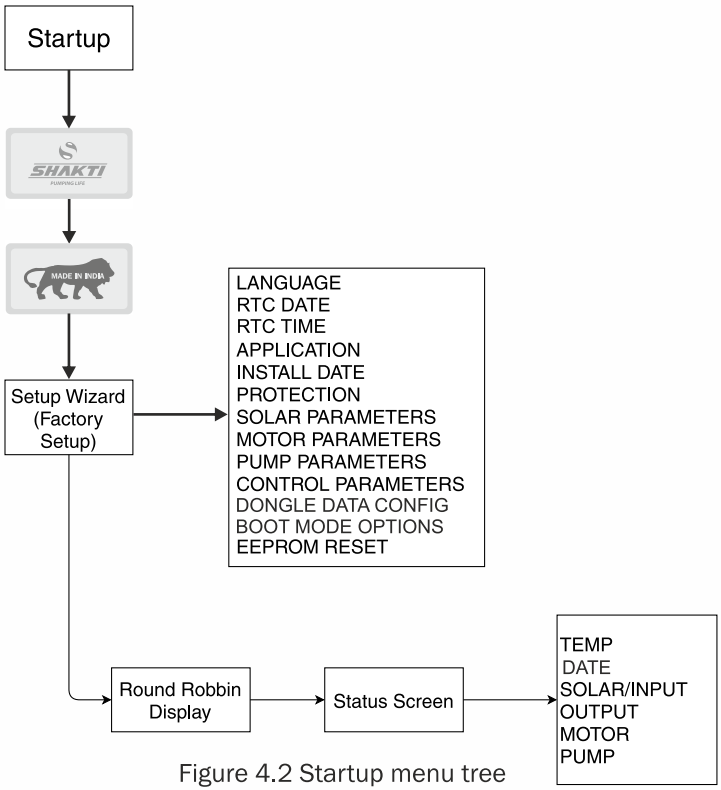

Figure 4.2 Startup menu tree

- Main Menu

In the main menu, users can access information or modify settings under different sections. The STATUS, CONTROL, and CONFIGURE, are discussed separately in further sections. FAULT LOG, Rs232 extract and Rs485 extract data can be viewed in LOGS. The ABOUT section provides information of firmware version, serial number & network details.

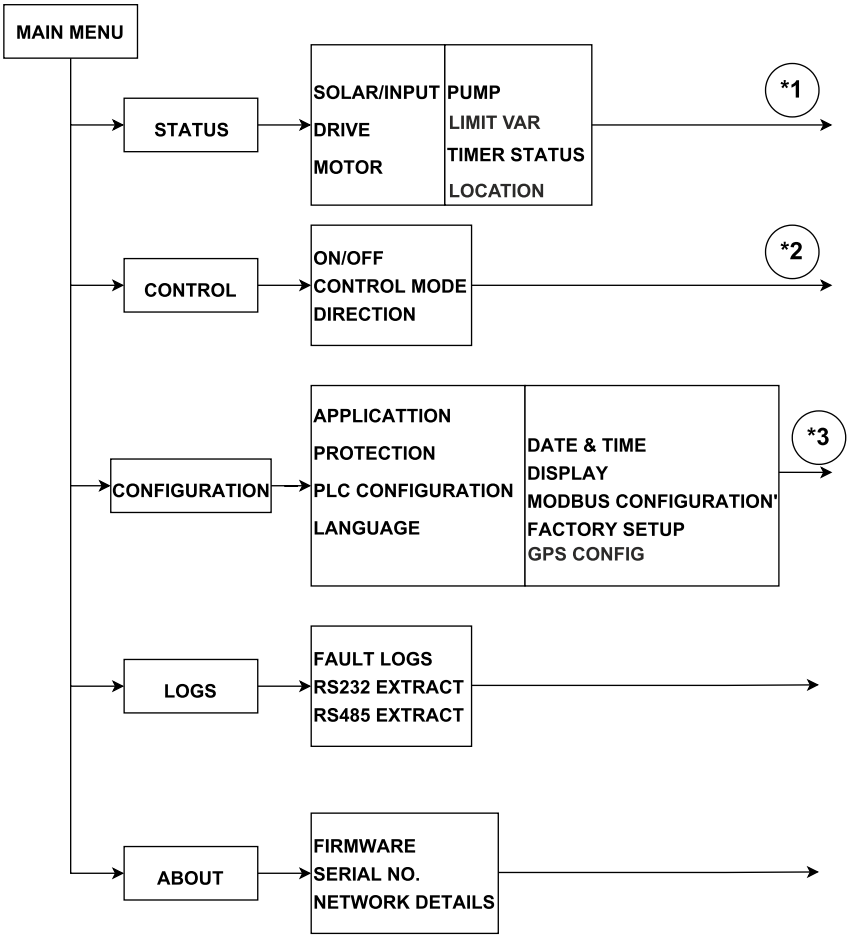

Figure 4.3 Main menu tree

▸ CONTROL (*2)

a) ON/OFF

Whenever ON option is selected, the motor will turn on until it is turned off manually or when some fault is generated.

b) CONTROL MODE

The motor can be operated in any of the five modes: AUTO, MANUAL, SPEED CONTROL, JOG & TIMER CONTROL.

i. AUTO: The motor starts automatically and continues to run until it is manually turned off or a fault occurs. If a fault occurs, the motor will restart automatically once the fault is cleared.

ii. MANUAL: Users have the option to manually turn the motor ON/OFF.

iii. SPEED CONTROL: The motor runs at a user-defined speed set in the display.

iv. JOG: Press the enter button inside the "Enter the Jog" option. The motor will run as long as the Enter button is pressed and releasing the button will stop the motor.

v. TIMER CONTROL: The “ON” time of motor is controlled based on the inbuilt timer of the device. The timer has two modes : countdown and scheduler, which can be selected via type of timer. The instant of turn ON and duration can be configured in the scheduler configuration menu of the timer.

Countdown Type: In this mode, the motor is started manually by pressing ON button in the display or via mobile app. Once the motor has started, a countdown corresponding to duration is managed and displayed. The maximum duration can be set up to 999 minutes.

Scheduler Type : In this mode, the motor start time and duration can be set for a week which will repeat in round robin. When the drives TURN ON for the first time in a day, it will wait for 15 mins before executing the scheduler. If the scheduler is over for a particular day, motor will not turn ON by the scheduler until next day.

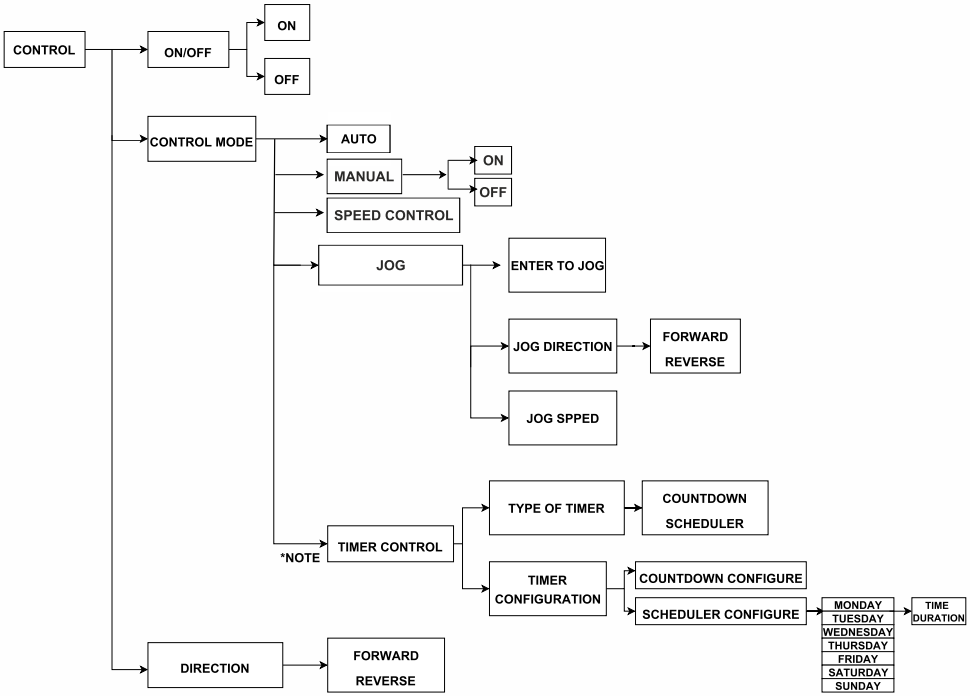

Figure 4.5 Control menu tree

▸ CONFIGURE (*3)

a) APPLICATION - This system can work for two applications: Solar & Grid.

b) PROTECTION - The protection limit for various parameters can be set according to the requirements by entering the correct password.

c) PLC / AUX CONFIGURATION- This section describes the usage of control inputs for drive. In AC input drives, PLC Configuration is available in which there are 8 digital inputs, 2 analog inputs and 2 analog outputs in the terminal connection block. Moreover, a non-regulated power supply of 20-24V, 100mA is also available. Whereas in DC input drives, AUX Configuration is available in which there are 2 analog inputs and 2 digital inputs in the terminal connection block.
• METER CONFIG - To interface analog flow meter for 0-10V linear.

▸ STATUS (*1)

a) SOLAR/ INPUT

This status shows either the real time parameters of SOLAR or INPUT depending upon the APPLICATION selected. In SOLAR mode, real-time PV conditions such as PV Voltage (V), PV Current (A), PV Power (W), Maximum PV Power (kW), and Minimum PV Power (W) are visible. Whereas, in GRID mode, parameters such as Input Voltage (V), Input Current (A), and Input Frequency (Hz) are visible. Additionally, parameters such as Today's Time (Hr), Today's Energy (kWh), and Total Energy (kWh) are common for both the modes.

b) DRIVE

This status shows the real time condition of the variable frequency drive of the system, such as Output Voltage(V), Output Current(A), Output Frequency(Hz), and Output Power(kW).

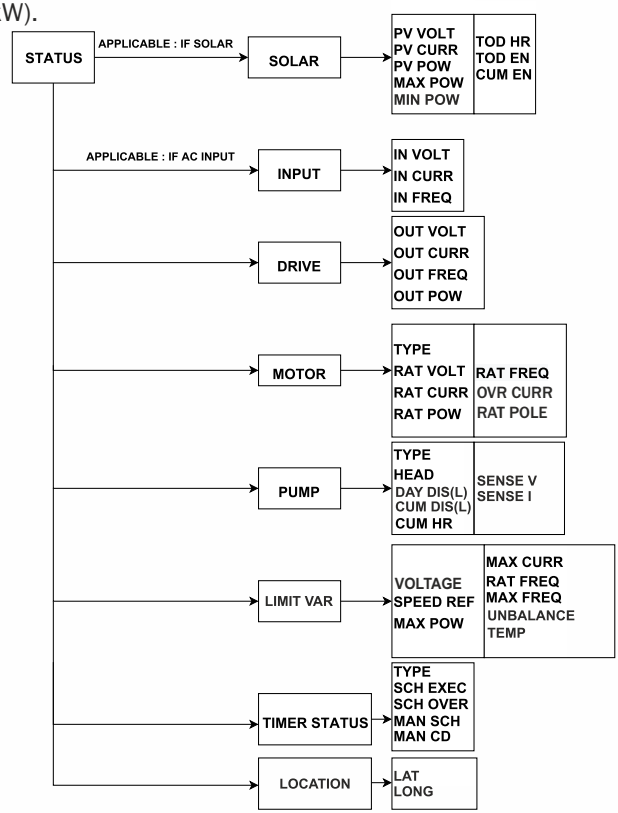

Figure 4.4 Status menu tree

c) MOTOR
This status shows the real time data of the motor which is driving the pump, such as the Type of motor selected for operation, Rated Voltage(V), Rated Current(A), Rated Power(HP), Rated Frequency (Hz), Over Current Limit(A), and number of Poles.

d) PUMP
This status shows the real time condition of the pump connected to the system, such as the Type and Head of the pump, Today Discharge(L), Total Discharge(L), Total Hour(Hr), Sense Voltage, and Sense Current.

e)LIMIT VAR
This status shows the reason for the motor's speed limit. It is used by authorized technicians or service personnel to debug the cause of speed limit. Their corresponding flag indicates 0 or 1. 0 indicates the following reason is not responsible for the speed limit and vice versa. These are the following reasons for the speed limit.

S.No.	Reasons	Flag	Detail
1	Voltage	1	DC voltage limits the speed.
2	Speed Ref	1	Speed reaches to its set speed.
3	Max Pow	1	Power reaches to set max power.
4	Max Curr	1	Current reaches to set max current.
5	Rat Freq	1	Frequency reaches to set rated frequency.
6	Max Freq	1	Frequency reaches to set max frequency.
7	Unbalance	1	One phase is missing.
8	Temp	1	Temperature reaches its maximum value.

f) TIMER STATUS
This status indicates the flag for timers, which are given below:
Type of timer: Scheduler type or Countdown type.
Schedule execution: When the scheduler is executing, that time this flag shows 1 otherwise 0.
Scheduler Over: When scheduler execution completes, this flag goes to 1.
Manual Scheduler: This indicates the manual start-up in scheduler mode.
Manual countdown: This indicates the manual start-up in countdown mode.

g) LOCATION
This Status indicates the latitude and longitude of location.

The SHAKTI drives uses a MACRO based configuration for control purpose. The control input functionality and MACRO description is given in the Application Note: Control Input configuration which is available in the controller section in the link given below:

http://www.shaktipumps.com/download-catalogues.php

d) DISPLAY - Users can configure the display settings by selecting the desired display mode, adjusting the contrast, enabling or disabling auto-roll, and activating the display lock feature for secure operation.

e) MODBUS CONFIGURATION : The Slave ID and Baud rate for serial communication via RS232 and RS485 can be configured in this section.

f) FACTORY SETUP - A security password is required to access this menu block.

i. SOLAR PARAMETERS
According to PV panels connected to the system, parameters shown in the figure 4.6 can be configured.

ii. MOTOR PARAMETERS
First the type of the motor is selected and by entering into the selected motor the rated parameters of that specific motor can be configured.

iii. PUMP PARAMETERS
After selecting the pump to be operated, the parameters specific to that pump can be configured.

iv. CONTROL PARAMETERS
The number of options available under control parameters varies with different models of the product.
The Toggle Switch is provided in customized models which provides the facility of turning ON and OFF the pump without operating the LCD power button.

v. DONGLE DATA CONFIGURATION
Erasing dongle data can be done by authorized technician/service personnel. Users are not allowed to erase the data of the dongle.

vi. BOOT MODE OPTIONS:
This functionality requires another security password to upgrade the firmware of the system by SERIAL BOOT MODE.

vii. EEPROM RESET
EEPROM can be reset only by authorized technician/service personnel. Users are not allowed to reset the EEPROM, since it may cause malfunctioning of the unit.

g) GPS CONFIG - Latitude and Longitude can be configured manually according to location.

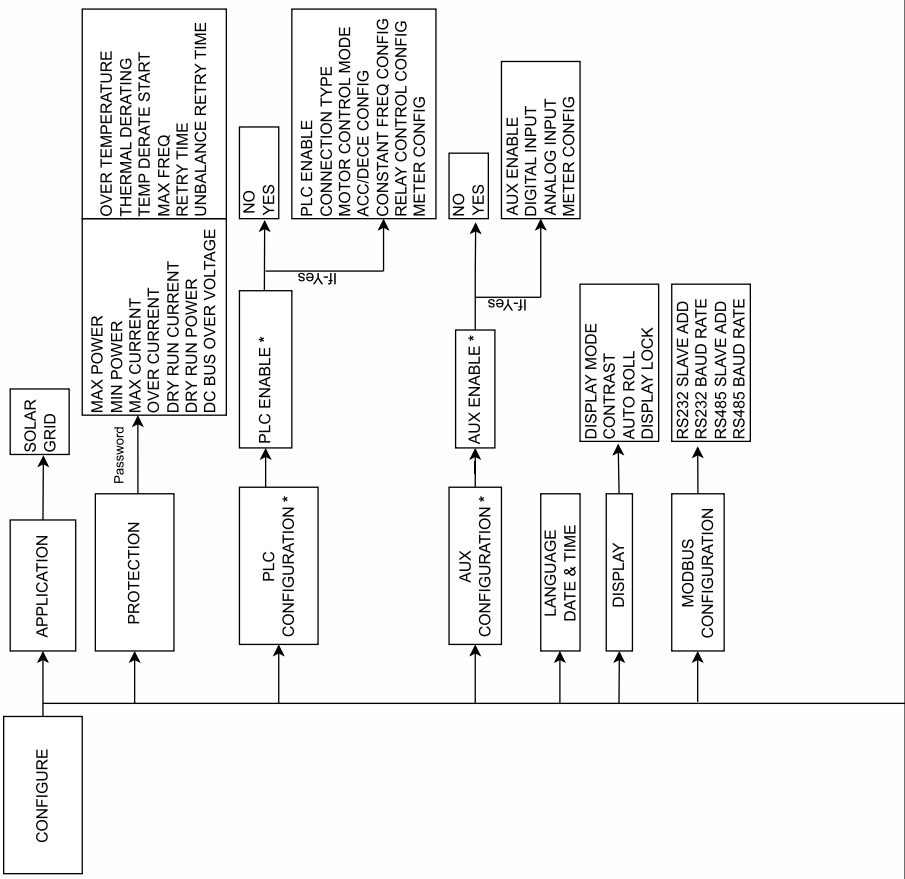

*NOTE : PLC ENABLE FOR GPD MODEL AND AUX ENABLE FOR SOLAR MODELS.

Figure 4.6 Configure menu tree

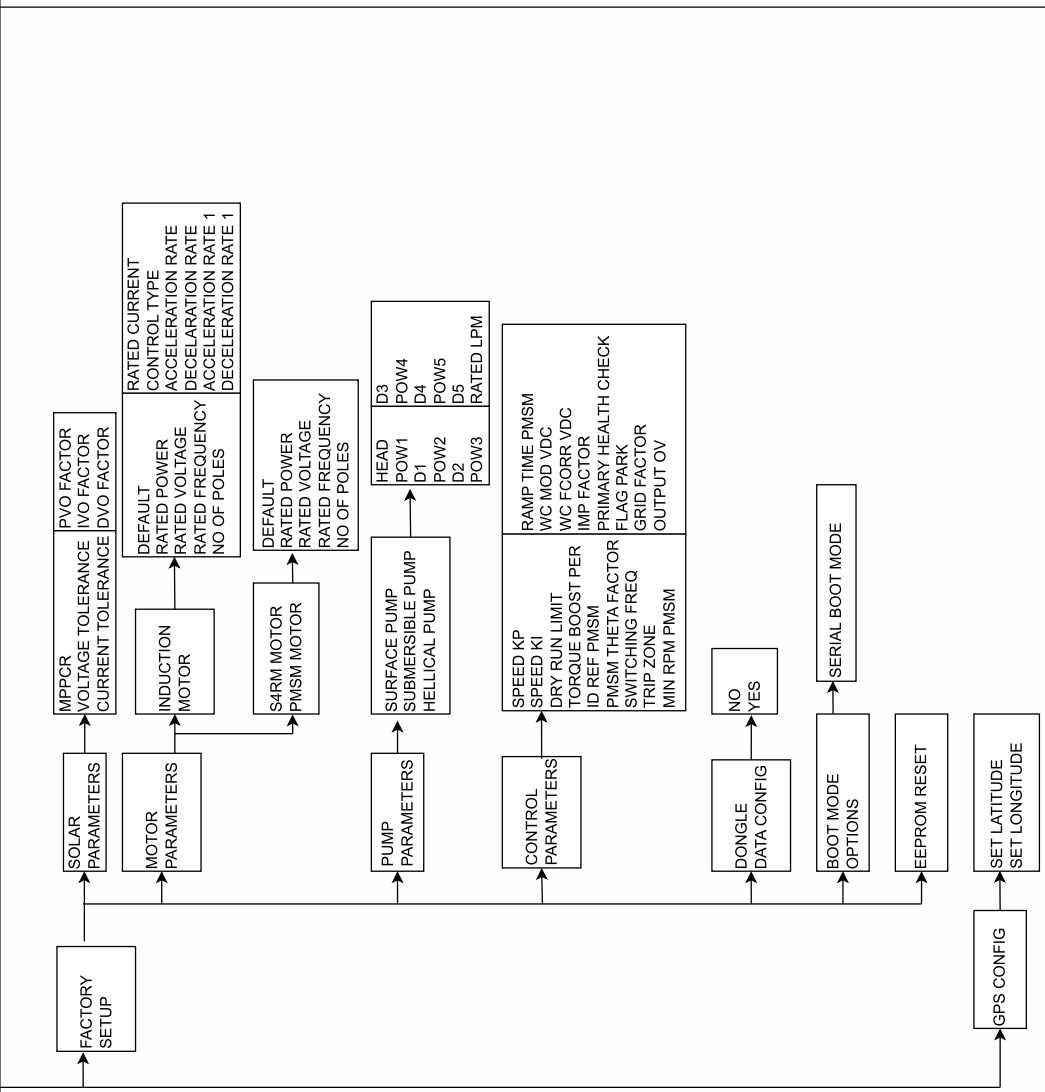

Figure 4.6 Configure menu tree

CHAPTER 5 NUMERICAL DISPLAY INFORMATION

The shakti display has got an unique feature that all the pages can be uniquely located with the use of words as well as numerals also. The location of pages wrt numerals has a definite sequence as described below:

Table 5.1 contains all parameters with their location number.
No numbers are displayed corresponding to ROLLING PAGES and MENU. Once someone enters the menu, all the pages are numbered based on their sequential location in the menu.
For e.g., CONTROL is at 2nd location and is therefore designated as 2 in the front. Any page inside CONTROL will start with 2. For example ON/OFF page is at 1st location inside CONTROL page so, it's numeral designator is 21, wherein 2 corresponds to CONTROL PAGE and 1 corresponds to the first page inside page number 2.
Another example, To understand numeral location of RATED FREQUENCY of PMSM is given below:

3 CONFIGURE >> 8 FACTORY SETUP >> 2 MOTOR PARAMETERS >>3 PMSM MOTOR>> 4 RATED FREQ.
Hence, Numeral designator for RATED FREQ of PMSM is 38234, as shown in fig. 5.1 which signifies go to the 3rd page of menu to reach CONFIGURATION then go to 8th location of CONFIGURATION to reach FACTORY SETUP(page 38). Then enter the 2nd location of page 38 to reach MOTOR PARAMETERS (page 382) then enter into 3rd location to go to PMSM MOTOR(page 3823) there go to 4th location which is RATED FREQ(page 38234).

All parameters and pages are numbered as per the above description. Except when the location inside a page is more than 9 then the designator is added with an extra underscore for example 12th location inside any page is designated as _12.
E.g., Numeral designator of ACCELERATION RATE1 is 3821_10
For ease of customers, the page numbers are displayed on the top and locations are displayed in front of all the parameters.

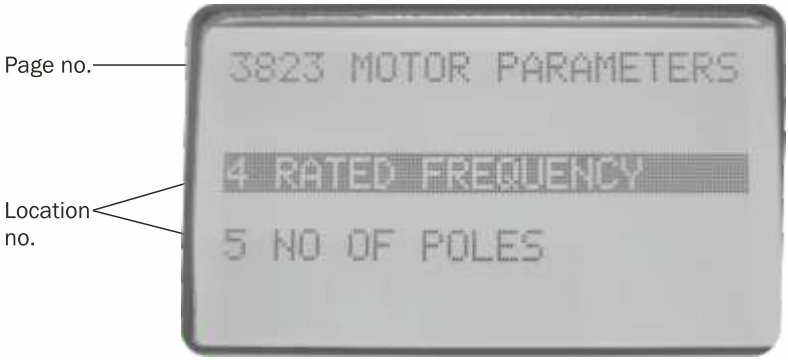

Figure 5.1

S.NO.	HEADINGS
0	MENU
1	STATUS
11	SOLAR
12	DRIVE
13	MOTOR
14	PUMP
15	LIMIT VAR
16	TIMER STATUS
17	DEBUG
2	CONTROL
21	ON/OFF
211	ON
212	OFF
22	CONTROL MODE
221	AUTO
222	MANUAL
223	SPEED CONTROL
224	JOG
2241	ENTER TO JOG
2242	JOG DIRECTION
22421	FORWARD
22422	REVERSE
2243	JOG SPEED
225	TIMER CONTROL
2251	TYPE OF TIMER
22511	COUNTDOWN
22512	SCHEDULER
2252	TIMER CONFIG
22521	COUNTDOWN CONFIGURE
22522	SCHEDULER CONFIGURE
225221	MONDAY CONFIG
2252211	TIME
2252212	DURATION
225222	TUESDAY CONFIG
2252221	TIME
2252222	DURATION
225223	WEDNESDAY CONF
2252231	TIME
2252232	DURATION
225224	THURSDAY CONFI
2252241	TIME
2252242	DURATION
225225	FRIDAY CONFIG
2252251	TIME
2252252	DURATION
225226	SATURDAY CONFI
2252261	TIME
2252262	DURATION
225227	SUNDAY CONFIG
2252271	TIME
2252272	DURATION
23	DIRECTION
231	FORWARD
232	REVERSE

3	CONFIGURE
31	APPLICATION
311	SOLAR
312	GRID
32	PROTECTION
321	MAX POWER
322	MIN POWER
323	MAX CURRENT
324	OVER CURRENT
325	DRY RUN CURRENT
326	DRY RUN POWER
327	DC BUS OVER VOLTAGE
328	OVER TEMP LIMIT
329	THERMAL DERATING
32_10	TEMP DERATE START
32_11	MAX FREQ
32_12	RETRY TIME
32_13	UNBALANCE RETRY TIME
32_14	DC SENSE FACTOR
33	AUX CONFIGURATION
331	AUX ENABLE
3311	NO
3312	YES
332	DIGITAL INPUT
3321	DIGITAL INPUT1
33211	FORCE STOP
3322	DIGITAL INPUT2
33221	YES
33222	NO
333	ANALOG INPUT
3331	ANALOG INPUT1
33311	AI MIN VALUE
33312	AI MIN PERCENTAGE
33313	AI MAX VALUE
33314	AI MAX PERCENTAGE
33315	SENSE DELAY SET
3332	ANALOG INPUT2
33321	VS MIN VALUE
33322	VS MIN PERCENTAGE
33323	VS MAX VALUE
33324	VS MAX PERCENTAGE
33325	SENSE DELAY SET
3333	DISPLAY FREQ CONF
33	PLC CONFIGURATION
331	PLC ENABLE
3311	NO
3312	YES
332	CONNECTION TYPE
333	MOTOR CONTROL MODE
3331	VS CONTROL
33311	VS MIN VALUE
33312	VS MIN PERCENTAGE
33313	VS MAX VALUE
33314	VS MAX PERCENTAGE
33315	SENSE DELAY SET
3332	AI CONTROL
33321	AI MIN VALUE
33322	AI MIN PERCENTAGE
33323	AI MAX VALUE
33324	AI MAX PERCENTAGE

33325	SENSE DELAY SET
3333	DIS FREQ CONFIG
3334	RS485 RPM CONTROL
3335	RS485 FRQ CONTROL
334	ACC/DECE CONFIG
3341	ACC CONFIG
33411	ACC CONFIG1
33412	ACC CONFIG2
3342	DECE CONFIG
33421	DECE CONFIG1
33422	DECE CONFIG2
335	CONST FREQ CONFIG
3351	FREQ REF1
3352	FREQ REF2
3353	FREQ REF3
336	RELAY CONTROL CONFI
3361	RELAY ONE CONFIG
33611	RELAY1 ENABLE
336111	NO
336112	YES
33612	RELAY1 FUNCTION
336121	FAULT
3362	RELAY TWO CONFIG
33621	RELAY2 ENABLE
336211	NO
336212	YES
33622	RELAY2 FUNCTION
336221	FREQUENCY DETECT
336222	STOP-SIGNAL FRQ
336223	UV SIGNAL
336224	OL EARLY WARNING
336225	RUN INDICATE
336226	Fmax REACHED
336227	SPEED1 REACHED
336228	SPEED2 REACHED
336229	SPEED3 REACHED
34	SELECT LANGUAGE
341	ENGLISH
35	DATE & TIME
351	SET DATE
352	SET TIME
36	DISPLAY
361	DISPLAY MODE
3611	ROLLING PAGES
3612	SHAKTI SCREEN
362	CONTRAST
363	AUTOROLL
3631	YES
3632	NO
364	DISPLAY LOCK
3641	YES
3642	NO
3643	CHANGE PASSWORD
37	MODBUS CONFIG
371	RS232 SLAVE ADD
372	RS232 BAUD RATE
373	RS485 SLAVE ADD
374	RS485 BAUD RATE
38	FACTORY SETUP
381	SOLAR PARAMETERS

3811	MPPCR
3812	VOLTAGE TOLERANCE
3813	CURRENT TOLERANCE
3814	PVO FACTOR
3815	IVO FACTOR
3816	DVO FACTOR
382	MOTOR PARAMETERS
3821	INDUCTION
38211	DEFAULT
38212	RATED POWER
38213	RATED VOLTAGE
38214	RATED FREQUENCY
38215	NO OF POLES
38216	RATED CURRENT
38217	CONTROL TYPE
382171	SCALAR
382172	VECTOR
38218	ACCELERATION RATE
38219	DECELERATION RATE
3821_10	ACCELERATION RATE1
3821_11	DECELERATION RATE1
3822	S4RM
38221	DEFAULT
38222	RATED POWER
38223	RATED VOLTAGE
38224	RATED FREQUENCY
38225	NO OF POLES
3823	PMSM
38231	DEFAULT
38232	RATED POWER
38233	RATED VOLTAGE
38234	RATED FREQUENCY
38235	NO OF POLES
383	PUMP PARAMETERS
3831	SURFACE PUMP
38311	HEAD
38312	POW1
38313	D1
38314	POW2
38315	D2
38316	POW3
38317	D3
38318	POW4
38319	D4
3831_10	POW5
3831_11	D5
3831_12	RATED LPM
3832	SUBMERSIBLE PUMP
38321	HEAD
38322	POW1
38323	D1
38324	POW2
38325	D2
38326	POW3
38327	D3
38328	POW4
38329	D4
3832_10	POW5
3832_11	D5
3832_12	RATED LPM

3833	HELICAL PUMP
38331	HEAD
38332	POW1
38333	D1
38334	POW2
38335	D2
38336	POW3
38337	D3
38338	POW4
38339	D4
3833_10	POW5
3833_11	D5
3833_12	RATED LPM
384	CONTROL PARAMETERS
3841	SPEED KP
3842	SPEED KI
3843	DRYRUN RPM LIMIT
3844	TORQUE BOOST PER
3845	ID REF PMSM
3846	PMSM THETA FACTOR
3847	SWITCHING FREQ
3848	TRIP ZONE
38481	YES
38482	NO
3849	MIN RPM PMSM
384_10	RAMP TIME PMSM
384_11	WC MOD VDC
384_12	WC FCORR VDC
384_13	IMP FACTOR
384_14	PRIMARY HEALTH CHK
384_14_1	DISABLE
384_14_2	ENABLE
384_15	FLAG PARK
384_15_1	DISABLE
384_15_2	ENABLE
384_16	GRID FACTOR
385	DONGLE DATA CONFIG
3851	NO
3852	YES
386	BOOT MODE OPTIONS
3861	SERIAL BOOT MODE
387	EEPROM RESET
3871	NO
3872	YES
4	LOGS
41	FAULT LOGS
42	RS232 EXTRACT
421	DAY DATA EXTRACT
422	YEAR DAT EXTRACT
423	FAULT DATA EXTRACT
43	RS485 EXTRACT
431	DAY DATA EXTRACT
432	YEAR DAT EXTRACT
433	FAULT DATA EXTRACT
5	ABOUT
51	FIRMWARE
52	SERIAL NUMBER
521	DRIVE SERIAL NO.
522	DONGLE SERIAL NO.
53	NETWORK DETAILS

Table 5.1

CHAPTER 6 FAULT DIAGNOSIS AND SOLUTION

This chapter describes the drive faults, related messages on LCD display, possible reasons of fault and their troubleshooting. Fault information and description is shown in table no. 6.2.

6.1 Fault Type

Type	Drive action when fault happen
Drive fault	If any fault is detected it will occur in following manner • Fault information will be shown at LCD display • Output of drive will be cut-off and motor will decelerate and stop.
External fault	For monitoring and protecting drive external signal can be given which can trip the drive.

Table 6.1 Fault type

Note : In case of remote monitoring the motor will not turn on and the fault status can be seen in menu under fault report.

● If the short circuit fault occurs, check the below conditions:
1.Remove the motor connection and run the drive.
2. If the drive runs OK:
   a) Check the motor wire connections at the connector for any loose connections. Ensure that no strands are touching each other.
   b) Check the cable of the motor.
   c) Check the megger readings of the motor and inspect for any motor winding related issues.

● If low power or DC bus undervoltage fault occurs, check the below conditions:
1. Check dust deposition on the solar panel.
2. Check the direction of solar panel.

6.1.1 Fault information and description in detail

Fault Type	LCD Display Message	Possibility Reason/s(reasons do not limit to the following given reasons)	Troubleshooting
Low Power*	01 LOW POWER	1.Low input power due to lesser intensity of sunlight or shadow on panels. 2. PV panels may not be in a healthy condition. 3. Solar power is less than minimum PV power settings.	1. Check is there low intensity of sunlight. If yes wait till proper sunlight come. 2. Decrease minimum input power settings.
DC Bus Under voltage	02 DC BUS UNDER VOLTAGE	1.Low input power due to lesser intensity of sunlight or shadow on panels. 2. PV panels may not be in a healthy condition. 3. Instantaneous High power drawn by motor due to mechanical Jam(Pump/Motor).	1. Check is there low intensity of sunlight. If yes wait till proper sunlight come. 2. Decrease minimum input power settings. 3. Check and clean motor pump set.
DC Bus Over voltage	03 DC BUS OVER VOLTAGE	1. DC bus voltage in the drive is more than the voltage set.	1. Check the no. Of PV cells connected in series. 2. Make sure the voltage is less than the voltage mentioned in the specification sheet on page no.10 &11. 3. Contact customer care.
Output Over voltage	04 OUTPUT OVER VOLTAGE	1. When the output side voltage is high when the drive is OFF.	1. Check if input is connected at right place. 2. Hardware failure. 3. Contact customer care.
Dry Run	05 DRY RUN DETECTED	1. No water available on the suction / inlet side of pump.	1. Check for availability of water at pump inlet. 2. Wait for water to come in, in case of submersible motor. 3. Check water level in water tank in case of surface motor. 4. Kindly do the priming properly.
Over Temperature	06 OVER TEMP PROTECTED	1. The drive heating is more than expected. 2. Improper ventilation.	1. Check for ventilation and mounting style. 2. Contact customer care.
Over Current at Output(RMS value of output current more than set value in drive parameters in factory setup)	07 OVER CURRENT DETECTED	1. Wrong values set (for rated current) in the factory setup. 2. Mismatch of connected load and selected parameters.	1. Set right value in the rated current parameter. 2. Check the output load connected. 3. Contact customer care.
Short Circuit Trip	08 SHORT CIRCUIT TRIP	1. Any of the connection, internal or output is shorted. 2. Voltage is too low. 3. A sudden load.	1. Correct shorted connection . 2. Check insulation health of cable. 3. Contact customer care.
High Inrush Current	09 HIGH INRUSH CURRENT	1. Sudden increase in load. 2. Wrong motor selected. 3. Cable joint not proper.	1. Select the proper motor and also select correct motor in menu. 2. Make proper joint of cable. 3. Contact customer care.
OUTPUT OPEN CIRCUIT	10 OUTPUT OPEN CIRCUIT	1.Occurs during the operation when any of the output is opened.	1. Check whether motor is connected at the output.
PMSM Start Fail	11 PMSM START FAIL	1. Starting Torque not enough. 2. Mechanical Jam(Pump/Motor).	1. Increase the torque boost % parameter value. 2. Increase INIT_RAMP_TIME_PMSM prarameter value.
Unbalance Fault	12 UNBALANCE FAULT	1. One of the phase among three is missing.	1. Check all the three phase connection. 2. Contact Customer Care.

Table 6.2

*This is not a fault but a warning.

SHAKTI PUMPING LIFE

CHAPTER 7 : SIMHA MODBUS COMMUNICATION PROTOCOL

7.1 Com Port Setting :

- RS485 in half duplex mode
- Port Setting:- Baud Rate -9600, Data Bits-8, Stop Bits-1, Parity-None

7.2 RTU Frame Structure :

Slave address	0X01
Function field	0x03 :Read single parameter 0x06 : Write single parameter
Data field	Data field includes address field and data load domain
CRC field	16bit CRC check value

7.2.1 Function Code : 0X03

This function code is used to read the contents of a contiguous block of registers.

Query–

Slave Address	Function Code	Register Address High	Register Address Low	High Register No	Low Register No	CRC Low	CRC High
0X01	0X03	——	———	0x00	0X01	———	———

Response—

Slave Address	Function Code	Byte Count	High bit	Low bit	CRC Low	CRC High
0X01	0X03	0X02	———	———	———	———

7.2.2 Function Code : 0X06

This function code is used to write the contents of a contiguous block of registers.

Query–

Slave Address	Function Code	Register Address High	Register Address Low	High Register No	Low Register No	CRC Low	CRC High
0X01	0X06	——	———	0x00	0X01	———	———

Response—

The response function code echoes the request function code

Slave Address	Function Code	Register Address High	Register Address Low	High Register No	Low Register No	CRC Low	CRC High
0X01	0X06	——	———	0x00	0X01	———	———

Note : If some error occurs, there is no response from the drive.
Minimum time interval for transmitting the frame and receiving the frame is 500ms.
(Contact technical support team for Modbus Address Table)

CHAPTER 8 : RECYCLING AND DISPOSAL

Electrical and electronic waste should not be thrown out in open or buried or fired. They must never be treated as residential waste. A drive which has reached end of its life or is not needed any more should be returned to the dealer or to the company. A user may also act as per the government norms prevailing in the area.

WARRANTY CERTIFICATE

Dear Customer, Congratulations, for purchasing our product. VFD's are warranted against defects in workmanship and material under normal use, service & specified duty conditions. We provide one time warranty service for five years from the date of purchase by the first user.

Shakti Pumps (India) Limited warrants this product to be free from damage/ defects in material and workmanship under normal use and service for five years from the date of purchase by the first user. The user shall produce valid and original copy of invoice for availing warranty. The user shall carry defective device to nearest authorized service center.

This warranty does not cover any loss or damage/ defect of any nature resulting from wrong product selection/ improper installation or installation by unauthorized/ untrained person and improper use of the VFD.

The warranty also does not cover consequential losses/ damages arising due to failure of VFD. No warranty will be provided on mechanical seal, rubber parts, fasteners and cables. Our obligation is limited to recycling or repairing or replacing product/ parts ex-factory.

Equipment for repairs should be returned free of cost to us. The forgoing is subject to the provision that the user does not open the unit and make any change or repair without prior approval of authorized service center during the warranty period. This warranty excludes every condition whether statutory or otherwise, whatsoever not herein expressly set out.

WARRANTY CARD *

Model name : .....

Serial number : .....

Device ID : .....

Date of installation /commissioning : .....

Invoice number : .....

Name and address of customer : .....

.....

.....

.....

Contact number : .....

Dealer's name & sign

WARRANTY TERMS & CONDITIONS -

The product is not covered by warranty in the following cases:

1. Normal wear and tear including color fade, minor scratches, white patches due to humidity.
2. Any defects that occur when the limited warranty period has expired.
3. Product installation must be performed by trained installers. If it's proven that the problem was caused by faulty installation, the faults or damages are NOT covered in warranty. e.g. insufficient isolation caused by broken DC cable; DC cable is not connected using the supplied PV connector and terminals (please see the installation, operation and maintenance instructions for correct handling).
4. Failures or damages resulting from not following the product manual or the prescribed installation and maintenance guidelines mentioned in the manual.
5. Disassembly, repair or modifications performed by a third-party company/person not authorized by SHAKTI. Product modifications, design changes or part replacements not approved by SHAKTI.
6. Faults or damages due to unforeseen circumstances, man-made factors, or examples of force majeure including but not limited to stormy weather, flooding, over voltage, power surge, pests, inappropriate handling, misuse, neglect, fire, water, lightning or other acts of nature.
7. For the products equipped with the SPD module, when the lightening is beyond the AC SPD's protection range, it won't be able to protect the VFD and it does NOT cover the VFD or accessory damage caused by such lightening.
8. External surge, over voltage or condition which causes VFD to fail and damage external SPD.
9. Vandalism, engraving, labels, irreversible marking or contamination or theft.
10. Violation of the original equipment warranty seal without written authorization from SHAKTI.
11. Usage which does not comply with the safety regulations.
12. Faults or damage caused by other factors not related to product quality issues.
13. Any rust that appears on the device's enclosure caused by harsh environmental conditions. Faults or damage caused by exposure to sea coasts/saltwater or other aggressive atmospheres or environmental conditions without SHAKTI's written confirmation/approval prior to the installation.
14. Product failure is not reported to SHAKTI within 15 Days of appearance.
15. The defect is caused by improper usage of the product or failure to comply with the usage of the product for purposes other than those for which the product was designed or intended.
16 The product is moved for any reason after it has been installed (regardless of whether it has been reinstalled subsequently or moved back to the same location) unless it is reinstalled at the same address by a qualified installer who has provided a test report to SHAKTI.
17. The damage or defect is caused by embedded or external software or hardware (e.g. the devices to control the VFDs or the devices to control battery charging or discharging) from third parties without authorization (agreement in writing) from SHAKTI.
18. The product is modified or altered (including the cases in which the product series number or product label is altered, removed, or defaced).
19. Failed to comply with the safety rules and regulations (Statuary /Legal) in respect of the VFD or accessory and during installation.
20. Improper earthing or earth resistance found more than 5 Ohm.
21. Voltage between Earth & Neutral observes more than 5 Volt.
22. Setting VFD parameters beyond recommended limits.
23. DC input voltage must not exceed maximum value of the model.

BOOK-POST

Stamp

To,
SHAKTI PUMPS (INDIA) LIMITED
Plot No. 401, 402 & 413, Industrial Area, Sector - 3,
Pithampur-454774, Dist. Dhar (M.P.) INDIA. Tel.: +91 7292 410500
E-mail: info@shaktipumps.com, sales@shaktipumps.com
Visit us at : www.shaktipumps.com

17 Dec. 2025/R1 | Dec./2025-26/L7/0000 | VC:0000 | SAP No. :2000019613



India : Toll Free No. 1800 103 5555 **Other Countries : +91-7292 410500**

SHAKTI PUMPS (INDIA) LIMITED

CIN : L29120MP1995PLC009327 I Web: www.shaktipumps.com I E-mail: info@shaktipumps.com, sales@shaktipumps.com

Corporate Office : Plot No. C-04, Silver Spring, Phase-2, Business Park, By-Pass Road, Opp D Mart, Indore-452020. (M.P.) INDIA. Tel.: +91 731 3635000

Regd. Office / Factory Add. : Plot No. 401, 402 & 413, Industrial Area, Sector - 3, Pithampur-454774, Dist. Dhar (M.P.) INDIA. Tel.: +91 7292 410500